tempio

RUSTIKOTTA SKIN

Rustikotta Prime

Technical catalogue

www.tempio.es

Index

1. PRODUCT

1.1. RUSTIKOTTA PRIME TILE

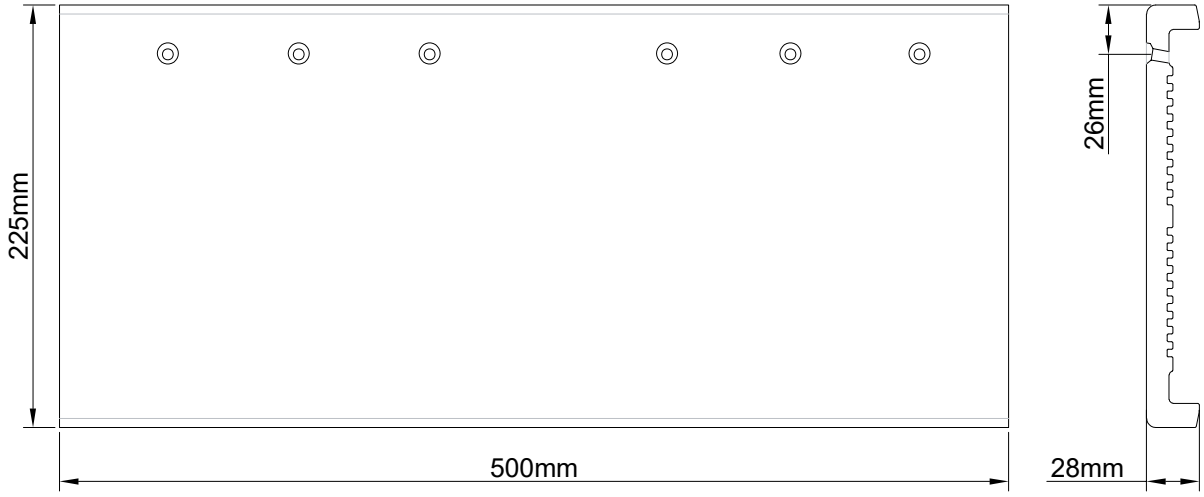

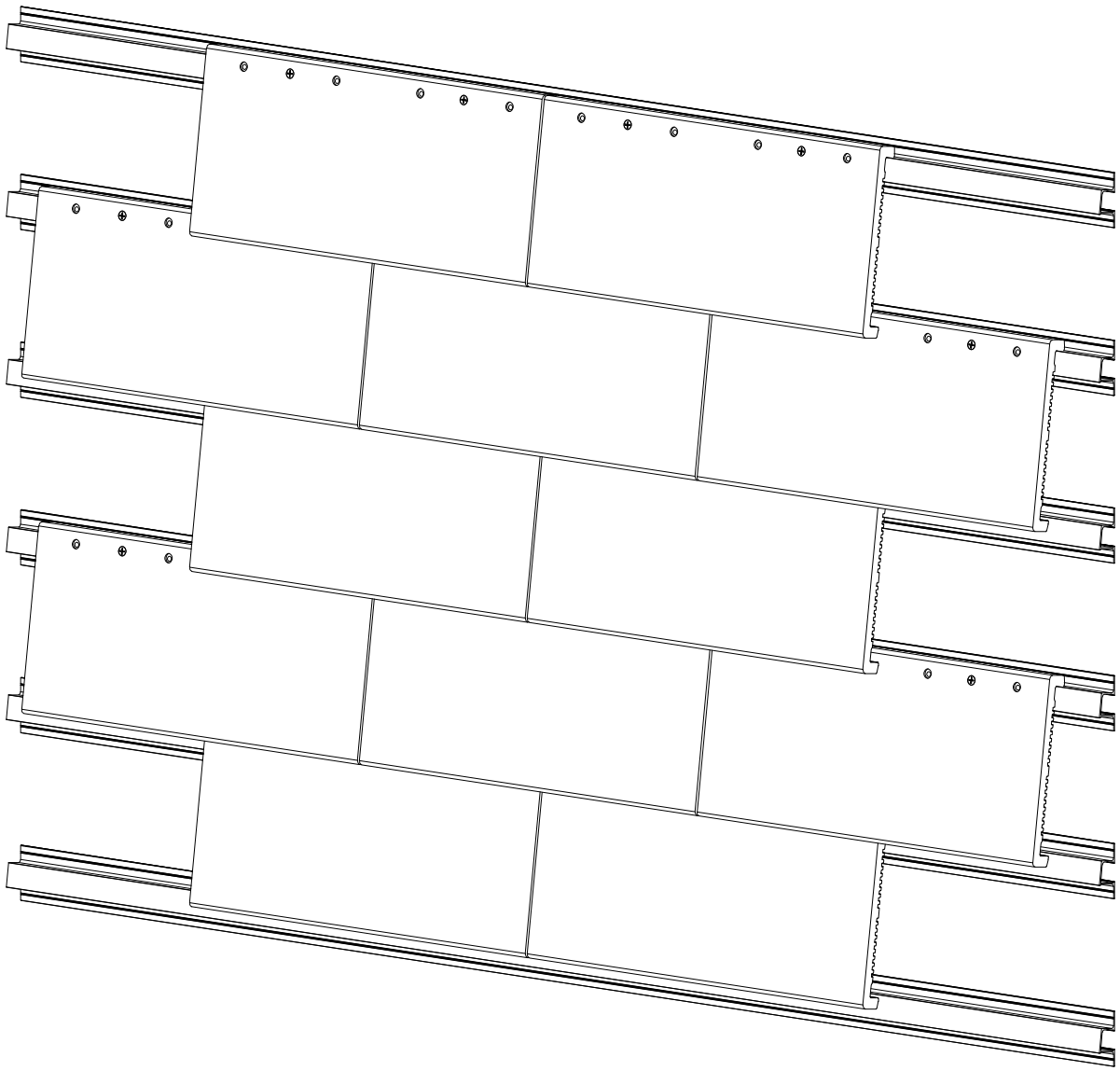

1.2. THE FAÇADE LOOKING

RUSTIKOTTA SKIN embraces TEMPIO small format of ceramic ventilated façade. The main aim of small format is to simplify the definition and installation of the façade.

Once installed, RUSTIKOTTA PRIME tiles give the façade an accentuated overlapping looking (ship-lap façade).

1.3. THE TILE

· TEXTURE

RUSTIKOTTA PRIME tiles present an irregular and deep texture:

· DESIGNED FOR IMPROVING INSTALLATION

· GLAZED SIDES

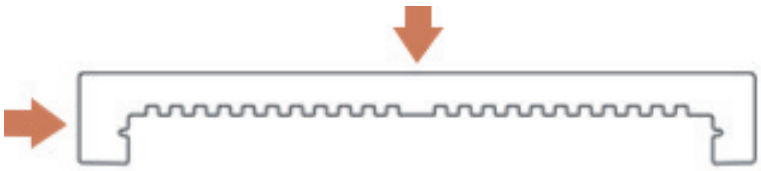

2 glazed sides to ensure the correct view.

· SCREW HOLES

Each tile has 6 pre-drilled countersunk holes. This countersunk design ensure the correct adaptation of the tiles, keeping the flat surface of the screwed tile.

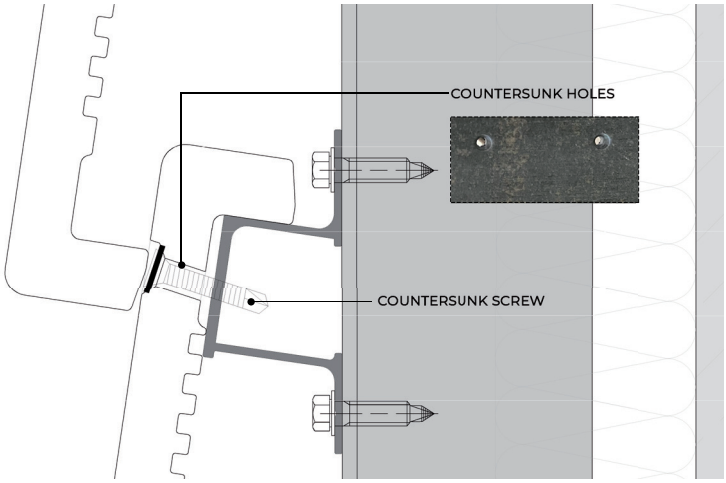

1.4. MATERIAL

· CHARACTERISTICS OF THE MATERIAL

RUSTIKOTTA PRIME tiles are 100% ceramic tiles. These tiles are CE marked.
RUSTIKOTTA PRIME tiles are recyclable material according to ISO 20887:2020.

· WORKING LIFE

· Lifespan: more than 125 years.

2. COLORS

Ceramic is a natural material that results from a natural process (milling of clays and firing process), and for that reason final product can show variations from one production to another. These variations can be related with final color or final texture.

Images and samples should be considered only as illustrative instrument.

COLOURS RANGE:

EK1005 RED FLAMED

EK1027 BLACK OXID

EK1051 NEW BLACK

EK1024 ANTIQUE MOSS

EK1009 LIGHT GREY FLAMED

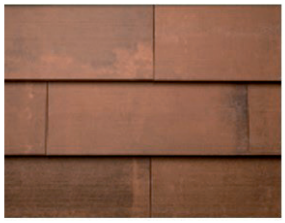

EK1038 TAMPICO

EK1014 WHITE SEPTEMBER

3. ADEQUACY OF THE SYSTEM

3.1. VENTILATED FAÇADE

RUSTIKOTTA PRIME tiles are designed as a external ceramic skin of a ventilated façade system. This handbook does not cover any other kind of installation.

3.2. CHARACTERISTICS OF VENTILATED FAÇADE

A ventilated façade is a façade system composed, at least, by four layers. From internal to the external they are: load-bearing structure (building), insulating layer, air chamber and ceramic skin.

The external layer is not airtight or leakproof, it only provides a rain/wind screen and ensures the correct ventilation of the air chamber.

Waterproofing and protection against UV should be solved with the insulating layer (which should be composed by materials with low water absorption)

3.3. ROOF INSTALLATION

Our RUSTIKOTTA SYSTEM is not sealed, joints are not watertight. RUSTIKOTTA PRIME tiles do not protect the building from water (normally roof tiles are placed and designed in order to prevent the water filtration).

In any case, if the problem of water is solved using other elements and RUSTIKOTTA tiles are only used as a decorative element in the roof design. RUSTIKOTTA tiles can be installed on the roof. The adequacy or not, should be checked by the architect of the project.

If the roof is mainly flat, the water accumulation will not be good for TEMPIO tiles. Roof installation is not recommended if the slope of the roof is less than 35%.

4. ALUMINIUM SUBFRAME

4.1. SCOPE

This handbook is based on TEMPIO experience and good practice. Please, take into account that:

- All the instructions included in this handbook are indicative:
    - They should not overrule structural design (defined by the architect/engineer of the façade) or current construction local regulations.
    - They should be adapted/adjusted to the real building.

On the other hand, fixation to the load-bearing structure is not included in this handbook. This should be designed following the local constructions regulations. Load-bearing structure could be the external vertical walls made of masonry (clay, concrete, or stone), concrete (cast on site or as prefabricated panels), timber or metal frame in new or existing buildings (retrofit).

4.2. SYSTEM COMPONENTS

MAIN ELEMENTS:

· VERTICAL PROFILE

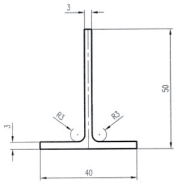

Vertical T profile 40x50x3mm
- · Weight: 0,715kg
- · Length of the elements: 3,00m
- · Material: Aluminium 6063 T5 (according to UNE-EN 755-2)

· HORIZONTAL PROFILE

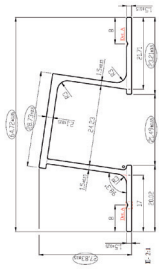

Horizontal omega profile for RUSTIKOTTA PRIME TILES. The slope of this profile has been designed to ensure the correct guidance of the ceramic tile.
- · Weight: 0,535kg/lm
- · Length of the elements: 4,00m
- · Material: Aluminium 6063 T5 (according to UNE-EN 755-2)

· STAINLESS SELF-DRILLING SCREW

This screw is used to fix the aluminium profiles (vertical and horizontal) with each other. Recommended screw is 5,5x25mm stainless steel A2 self-tapping screw.

· COUNTERSUNK STAINLESS SELF-DRILLING SCREWS

This screw is used to fix the ceramic tile to the horizontal profile and includes an EPDM washer. Recommended screw is 4,5x25mm. This washer prevents rattling and, with it, the noise of the façade.

SECONDARY ELEMENTS:

· STARTER PROFILE

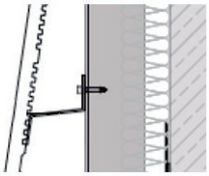

These profiles ensure the second point of support for the first line (bottom) of tiles.
This profile remains hidden and it can not be seen when we see the façade from the front.

· MOUSESTOP PROFILE

This kind of profiles are used to avoid the entrance of animals or plants in the air-chamber of the ventilated façade.

· CORNER PROFILES

Most part of corner solutions requires vertical aluminium profiles. There are a wide range of typologies for this solution, some of them are included in this handbook.

4.3. SETTING IT OUT

It is always recommended to draw the façade before mounting it. Setting the elements out before mounting them will increase the efficiency in the mounting process: ensuring a faster and controlled installation.

We recommend following these steps to draw the façade:

1. FIRST OF ALL

Work with a dimension drawing of the façade.

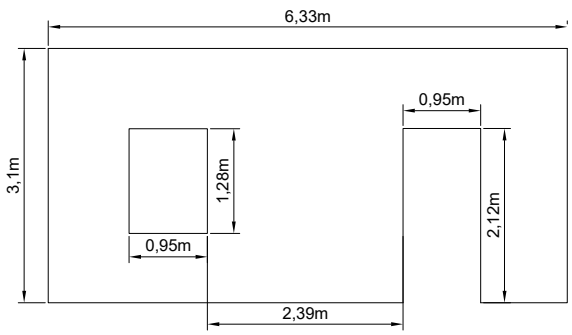

2. DRAWING VERTICAL PROFILES

2.1. Around corners and window or door cavities we should **respect a distance of (minimum) 70mm**.

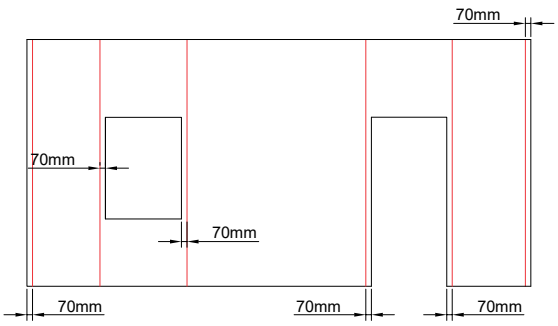

2.2. The **maximum distance between two vertical profiles is 90cm**.

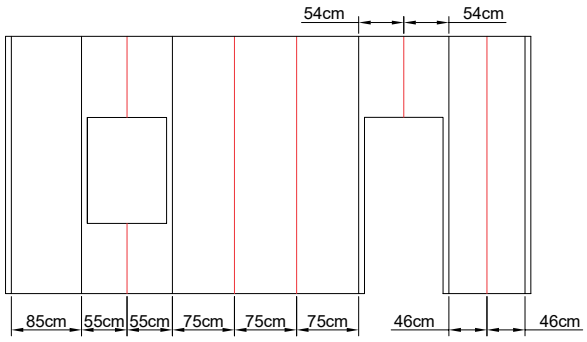

2.3. If the façade is **higher than the length of the vertical profile (3m)**, **we should leave at least 10mm between profiles**, leaving space for aluminium expansion movements.

3. DRAWING HORIZONTAL PROFILES

Although horizontal profiles are 4m length, **we do not recommend installing them in lengths exceeding 2000mm**. **Distance between two horizontal rails consecutives should be at least 5mm.**

3.1. Bottom profile

To ensure the correct performance of the ventilated façade, **we recommend to install the first tile at least 150mm from the floor**.

That means that **the first profile should be placed 346mm from the floor**.

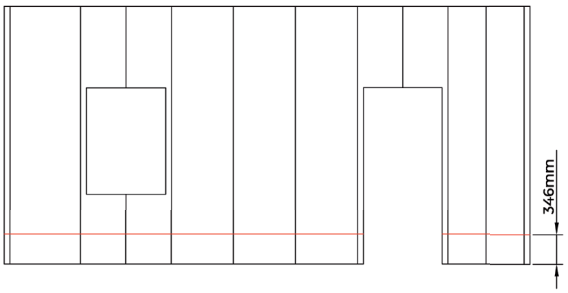

Elevation view

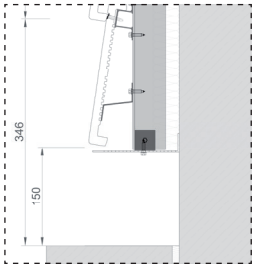

Section

3.2. Top part of windows and doors

It is recommended to **leave at least 10mm between the bottom part of the tile and the window profile**.

That means that the **horizontal profile should be placed about 216mm upper windows and doors.**

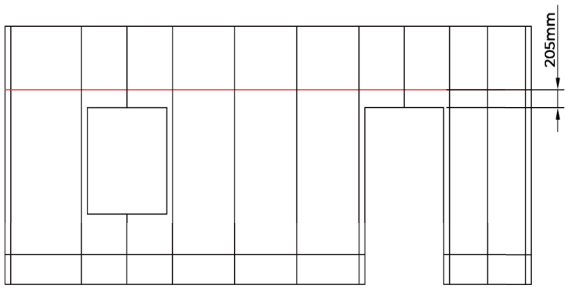

Elevation view

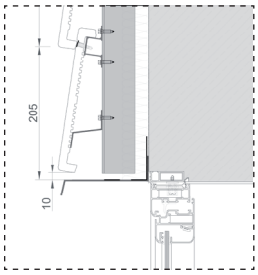

Section

3.3. Under the roof and bottom part of windows

It is recommended t**o leave at least 50mm between the bottom part of the sill element.** That means that the horizontal profile should be placed about 78mm down from the windows and top part of the façade.

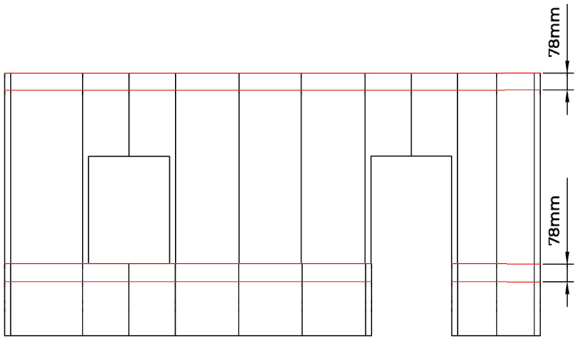

Elevation view

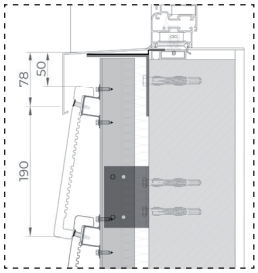

Section

3.4. Place de horizontal profiles

The distance between horizontal profiles should be 190mm.

190mm between horizontal profiles:

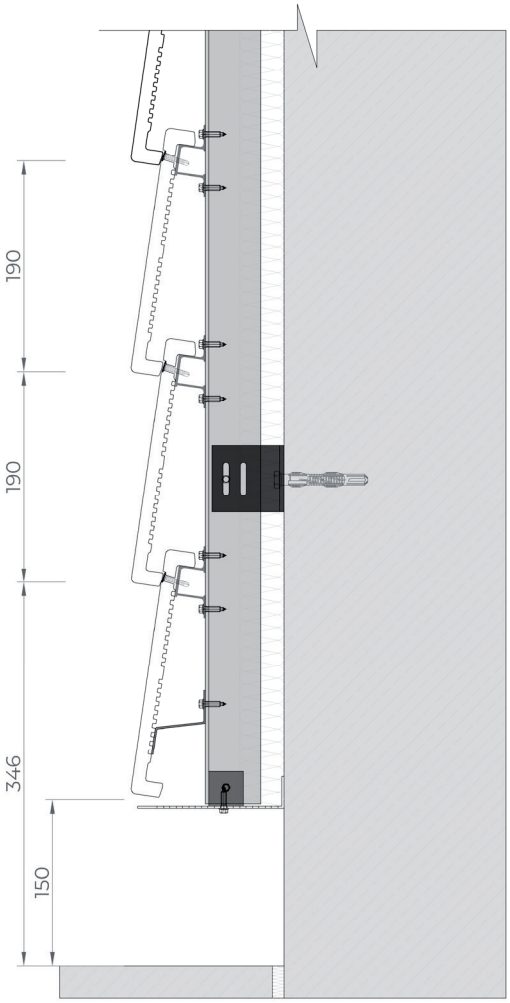

1sqm of façade are 10,5 tiles

Below we attach all the installation details of placing the Rustikotta tiles.

Perspective · Perspectiva

1. Sustainting bracket
   Escuadra sustentación

2. Vertical T profile 40x50x3mm
   Perfil vertical T 40x50x3mm

3. Horizontal omega profile
   Perfil omega horizontal

4. Stainless steel self drilling screw 5,5x25mm (not coated)
   Tornillos autotaladrantes de acero inoxidable 5,5x25mm (sin recubrimiento)

5. Countersunk stainless steel self drilling 4,5x25mm (with different colors)
   Tornillos avellanados de acero inoxidable 4,5x25mm (con diferentes colores)

6. RK Prime tile
   Pieza RK Prime

Perspective detail · Detalle perspectiva

1. Sustainting bracket
   Escuadra sustentación

2. Vertical T profile 40x50x3mm
   Perfil vertical T 40x50x3mm

3. Horizontal omega profile
   Perfil omega horizontal

4. Stainless steel self drilling screw 5,5x25mm (not coated)
   Tornillos autotaladrantes de acero inoxidable 5,5x25mm (sin recubrimiento)

5. Countersunk stainless steel self drilling 4,5x25mm (with different colors)
   Tornillos avellanados de acero inoxidable 4,5x25mm (con diferentes colores)

6. RK Prime tile
   Pieza RK Prime

Corner detail · Detalle esquina

1. Sustainting bracket
   Escuadra sustentación

2. Vertical T profile 40x50x3mm
   Perfil vertical T 40x50x3mm

3. Horizontal omega profile
   Perfil omega horizontal

4. Stainless steel self drilling screw 5,5x25mm (not coated)
   Tornillos autotaladrantes de acero inoxidable 5,5x25mm (sin recubrimiento)

5. Countersunk stainless steel self drilling 4,5x25mm (with different colors)
   Tornillos avellanados de acero inoxidable 4,5x25mm (con diferentes colores)

6. RK Prime tile
   Pieza RK Prime

7. RK Prime tile cut at 45°
   Pieza RK Prime cortada a 45°

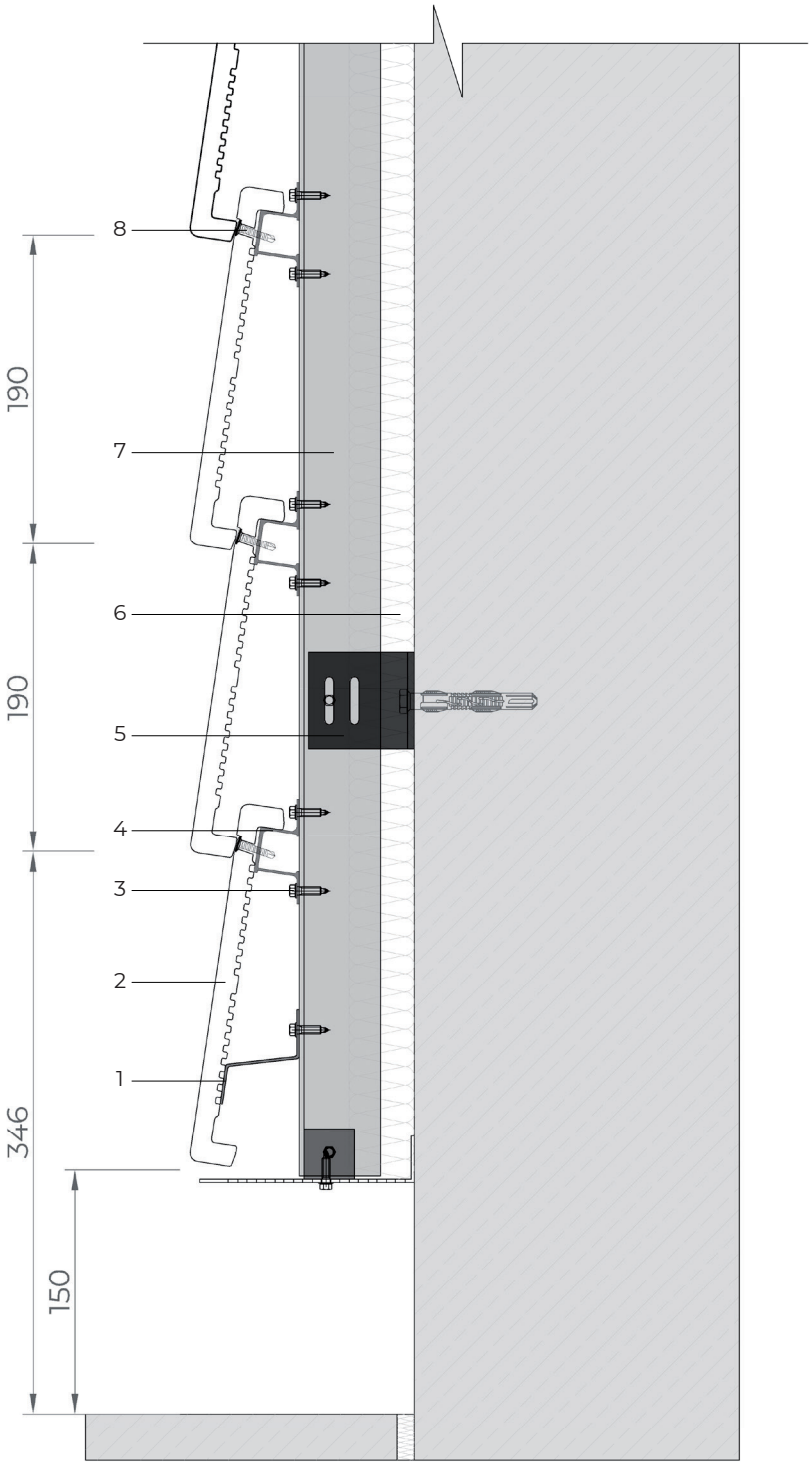

Sizes in millimeters · Dimensiones en milímetros

Starter detail · Detalle arranque

1. Horizontal starter profile
   Perfil horizontal de arranque

2. RK Prime tile
   Pieza RK Prime

3. Stainless steel self drilling screw 5,5x25mm (not coated)
   Tornillos autotaladrantes de acero inoxidable 5,5x25mm (sin recubrimiento)

4. Horizontal omega profile
   Perfil omega horizontal

5. Retaining bracket
   Escuadra retención

6. Insulation
   Aislamiento

7. Vertical T profile 40x50x3mm
   Perfil vertical T 40x50x3mm

8. Countersunk stainless steel self drilling 4,5x25mm (with different colors)
   Tornillos avellanados de acero inoxidable 4,5x25mm (con diferentes colores)

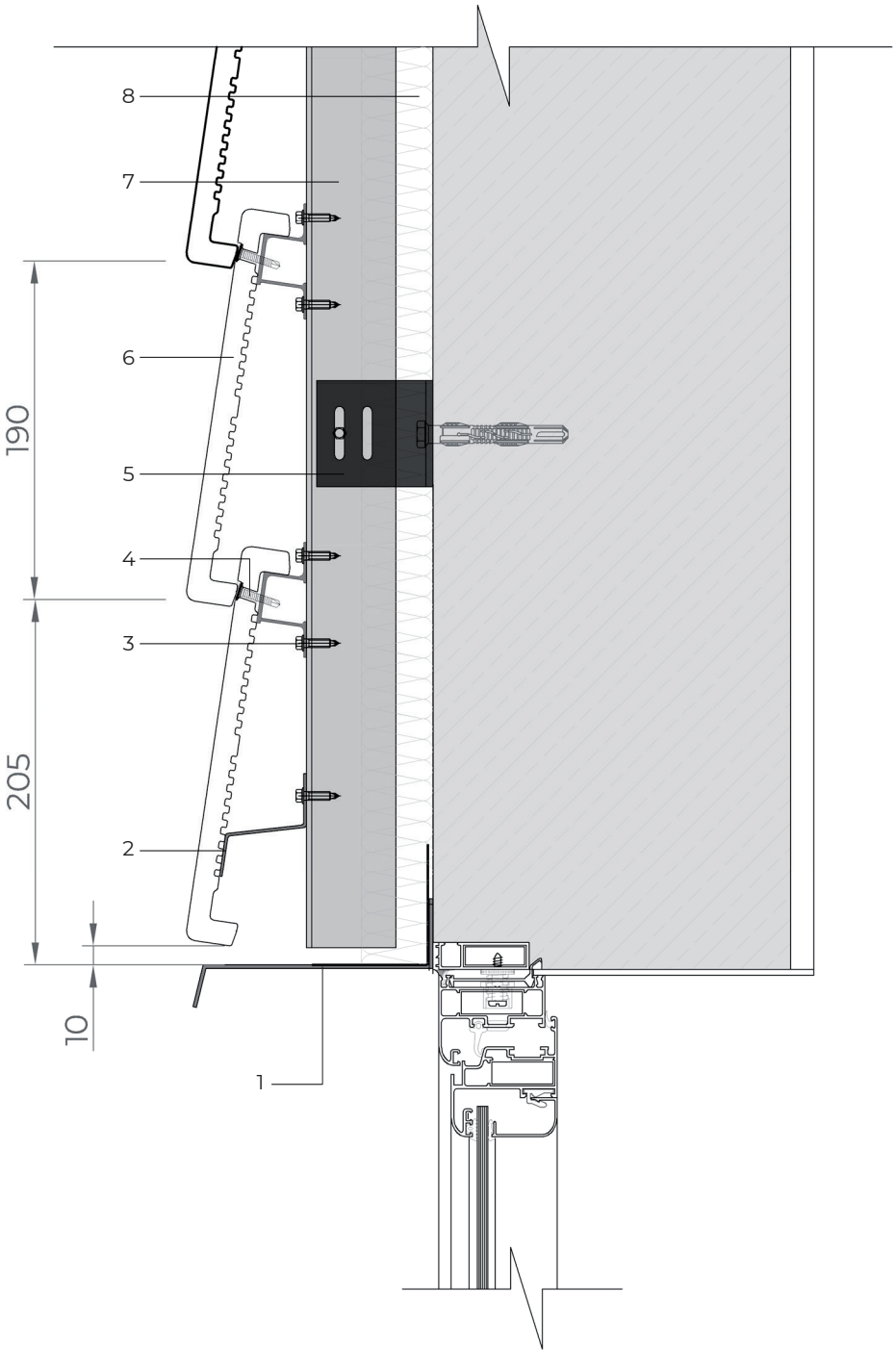

Sizes in millimeters · Dimensiones en milímetros

Metallic lintel detail · Detalle dintel metálico

1. Aluminium frame
   Marco de aluminio

2. Horizontal starter profile
   Perfil horizontal de arranque

3. Stainless steel self drilling screw 5,5x25mm (not coated)
   Tornillos autotaladrantes de acero inoxidable 5,5x25mm (sin recubrimiento)

4. Countersunk stainless steel self drilling 4,5x25mm (with different colors)
   Tornillos avellanados de acero inoxidable 4,5x25mm (con diferentes colores)

5. Retaining bracket
   Escuadra retención

6. RK Prime tile
   Pieza RK Prime

7. Vertical T profile 40x50x3mm
   Perfil vertical T 40x50x3mm

8. Insulation
   Aislamiento

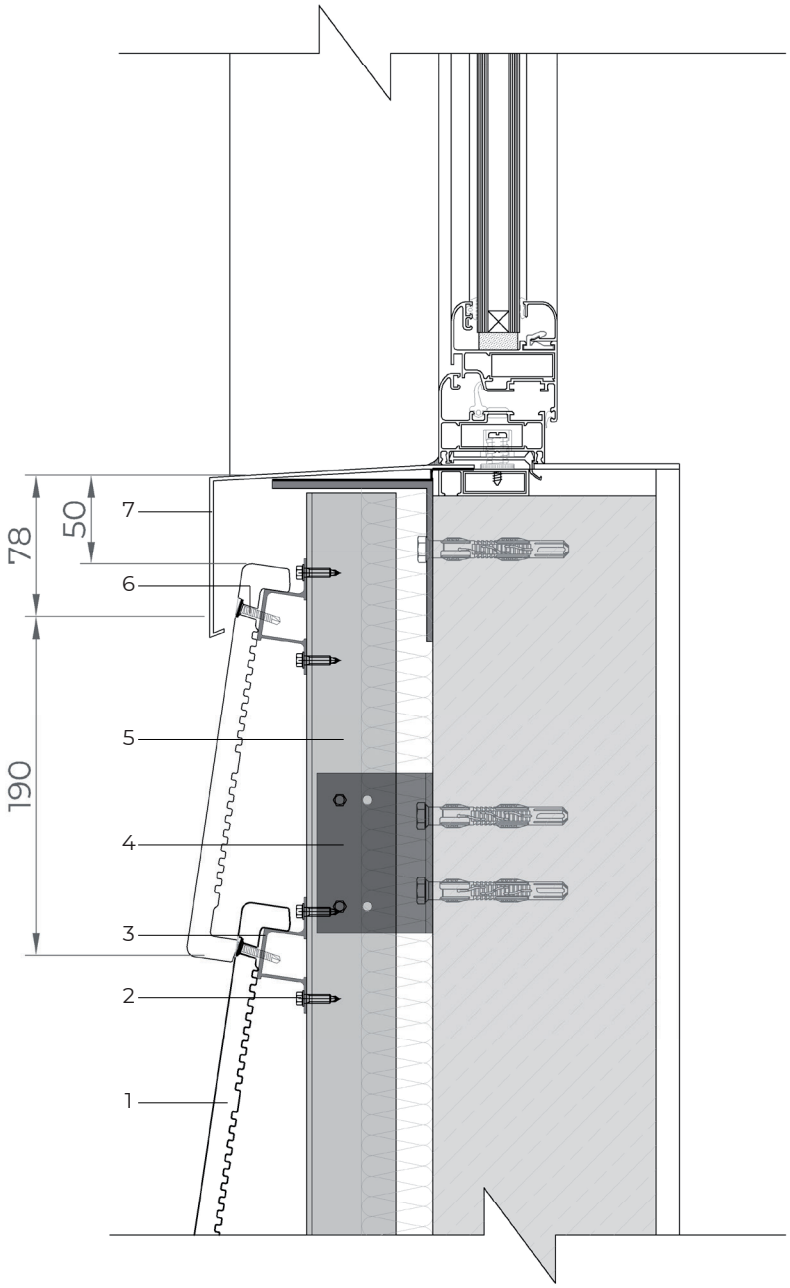

Sizes in millimeters · Dimensiones en milímetros

Metallic sill detail · Detalle vierteaguas metálico

1. RK Prime tile
   Pieza RK Prime

2. Stainless steel self drilling screw 5,5x25mm (not coated)
   Tornillos autotaladrantes de acero inoxidable 5,5x25mm (sin recubrimiento)

3. Horizontal omega profile
   Perfil omega horizontal

4. Sustainting bracket
   Escuadra sustentación

5. Vertical T profile 40x50x3mm
   Perfil vertical T 40x50x3mm

6. Countersunk stainless steel self drilling 4,5x25mm (with different colors)
   Tornillos avellanados de acero inoxidable 4,5x25mm (con diferentes colores)

7. Aluminium frame
   Marco aluminio

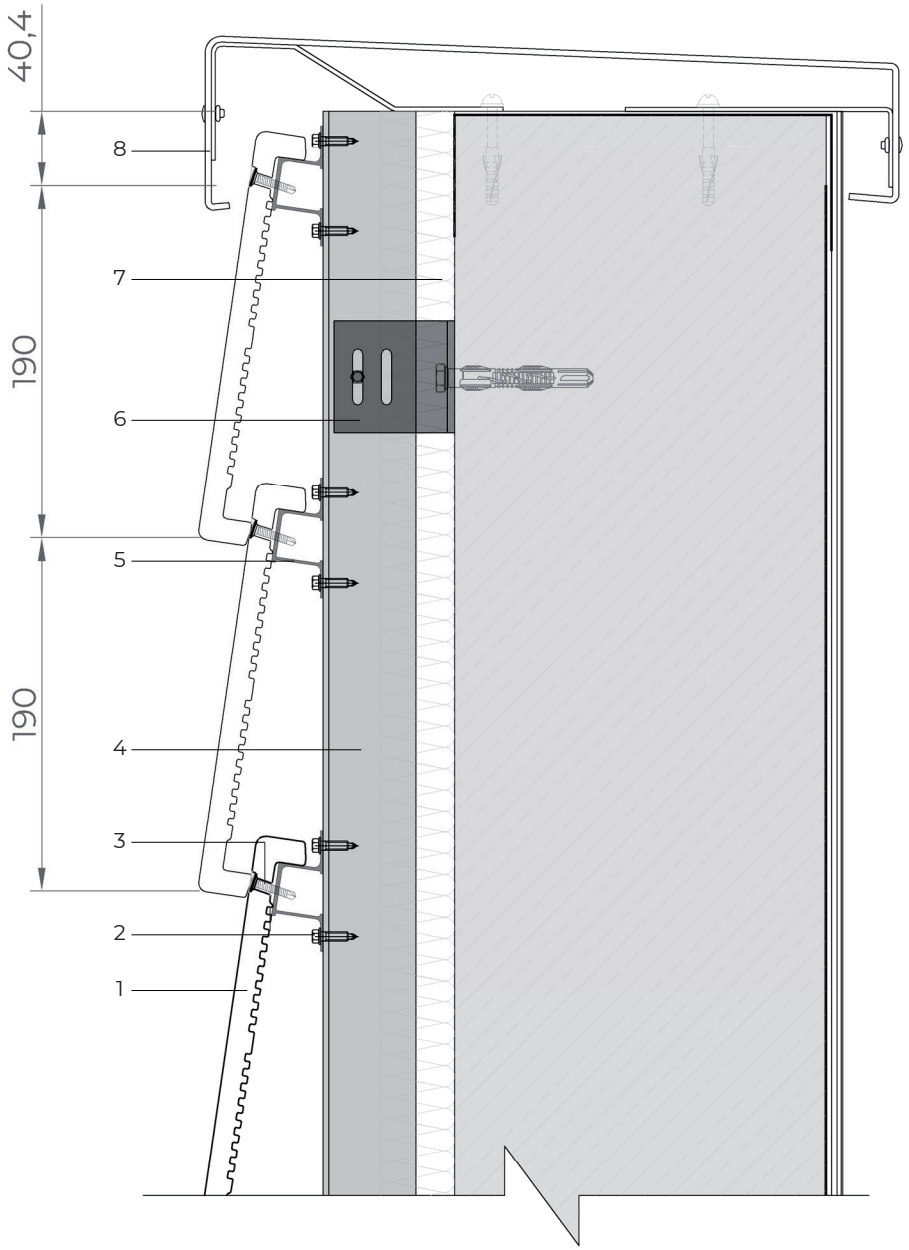

Sizes in millimeters · Dimensiones en milímetros

Metallic coping detail · Detalle coronación metálica

1. RK Prime tile
   Pieza RK Prime

2. Stainless steel self drilling screw 5,5x25mm (not coated)
   Tornillos autotaladrantes de acero inoxidable 5,5x25mm (sin recubrimiento)

3. Countersunk stainless steel self drilling 4,5x25mm (with different colors)
   Tornillos avellanados de acero inoxidable 4,5x25mm (con diferentes colores)

4. Vertical T profile 40x50x3mm
   Perfil vertical T 40x50x3mm

5. Horizontal omega profile
   Perfil omega horizontal

6. Retaining bracket
   Escuadra retención

7. Insulation
   Aislamiento

8. Metallic coping
   Coronación metálica

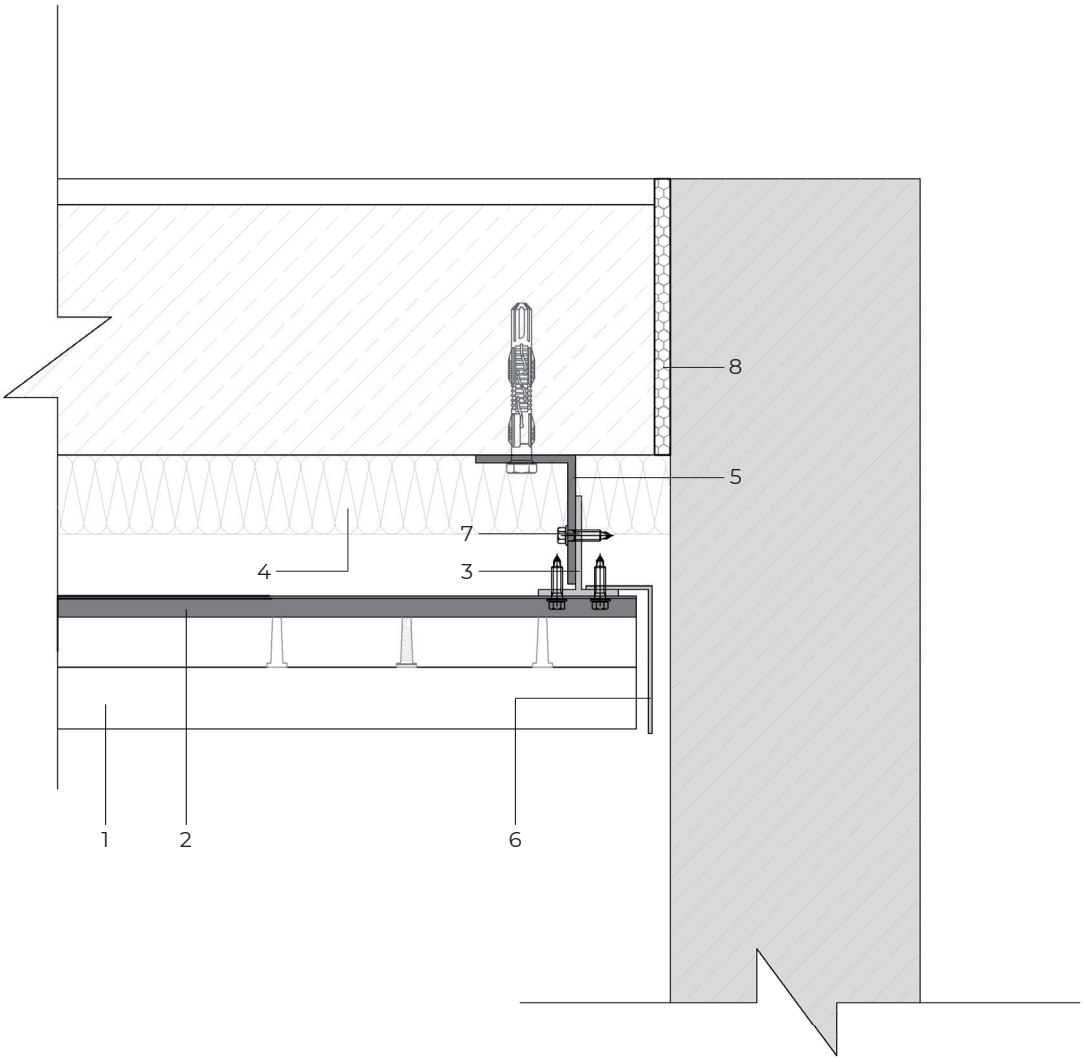

Intersection between façade and wall detail · Detalle intersección entre fachada y muro

1. RK Prime tile
   Pieza RK Prime

2. Horizontal omega profile
   Perfil omega horizontal

3. Vertical T profile 40x50x3mm
   Perfil vertical T 40x50x3mm

4. Insulation
   Aislamiento

5. Sustainting or retaining bracket
   Escuadra sustentación o retención

6. Termination angle
   Ángulo de terminación

7. Stainless steel self drilling screw 5,5x25mm (not coated)
   Tornillos autotaladrantes de acero inoxidable 5,5x25mm (sin recubrimiento)

8. Elastic joint
   Junta elástica

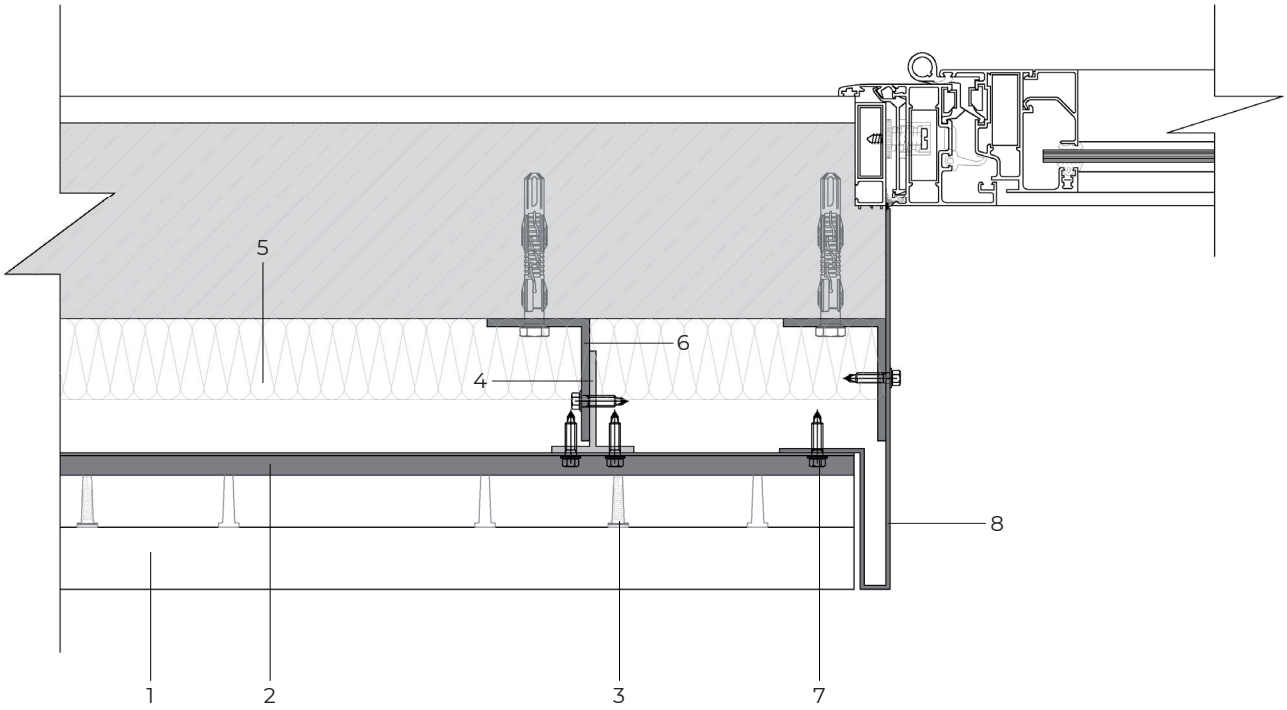

Metallic jamb detail · Detalle jamba metálica

1. RK Prime tile
   Pieza RK Prime

2. Horizontal omega profile
   Perfil omega horizontal

3. Countersunk stainless steel self drilling 4,5x25mm (with different colors)
   Tornillos avellanados de acero inoxidable 4,5x25mm (con diferentes colores)

4. Vertical T profile 40x50x3mm
   Perfil vertical T 40x50x3mm

5. Insulation
   Aislamiento

6. Sustainting or retaining bracket
   Escuadra sustentación o retención

7. Stainless steel self drilling screw 5,5x25mm (not coated)
   Tornillos autotaladrantes de acero inoxidable 5,5x25mm (sin recubrimiento)

8. Metallic jamb
   Jamba metálica

6. AT THE JOB SITE

6.1. STORAGE

The ceramic tiles come palletized without cartoon boxes. Here the general characteristics of the packing:

· Pallet tiles: **216 pieces (21,60sqm)**
Tiles are packed in packages of 4 pieces
1sqm of façade are 10,5 tiles

· Pallet weight: **851kg**

· Pallet size: **75x110x115cm**

This packing protects the ceramic material during transport and (if it is in good condition) protects the tiles from the elements. If the plastic is broken, **we recommend to use a extra covering in the jobsite.**

Pallets are stackable for storage (2 rows). We recommend to check that the ground is leveled and it is hard enough before storing the material. A wooden board can be placed between stack pallets to increase the protection of the tiles.

6.2. MANIPULATION (ADJUSTMENT TILES)

RUSTIKOTTA PRIME tiles can be cut and drilled at jobsite to get the sizes needed for the façade. It should be takent into account that:

· CUTTING TILES:

· It is recommended to use a traditional cutter or a water diamond blade.

· Adjustment in length: The final adjustment tile shoud not be smaller than 10cm wide.

· Adjustment in module: The tile should be cut on top part and drill holes afterwards.

· Adjustment in diagonal: Sometimes it is needed to adjust the tiles under a slope.

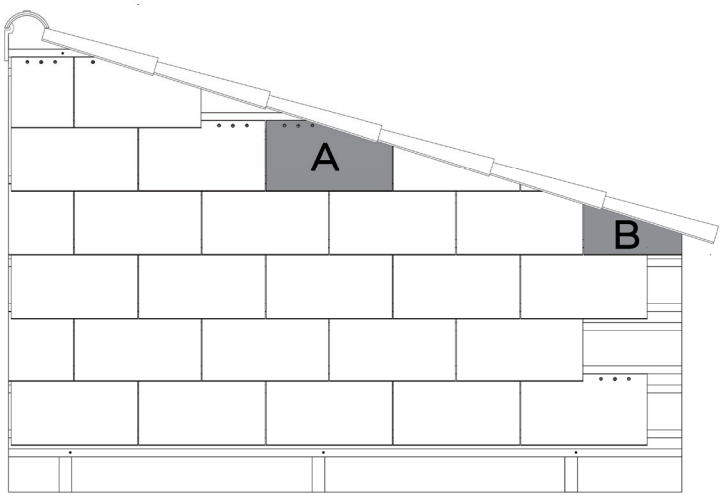

A TILE:

When the cut allows it, we can fix the tile by two screws.

B TILE:

RUSTIKOTTA TILES are not heavy tiles. When the tile that we need to finish the scheme is too little and it does not admit screws, we can glue it and screw it to the previous tile. We recommend to use a plate behind to ensure the correct adjustment.

· DRILLING TILES:

New holes for installing or adapting project elements.

· It is recommended to use diamond drill bits, refrigerated by water.
· Minimum distance from the hole to the border of the tile, 30mm.

The sut that appears during manipulation process should be eliminated just after the cutting/drilling work.

6.3. PREVIOUS STEPS

· FLATNESS OF THE WALL:

It is always needed to revise the straightness of the substrate.
It is recommended to ensure that flatness difference is not more than 3mm in 2m (vertical and horizontal).

6.4. INSTALLATION

Installation shoud be carried out by appropriately qualified staff.

· SUBSTRUCTURE:

Horizontal profiles should be screwed to vertical profiles with two screws at each intersection.

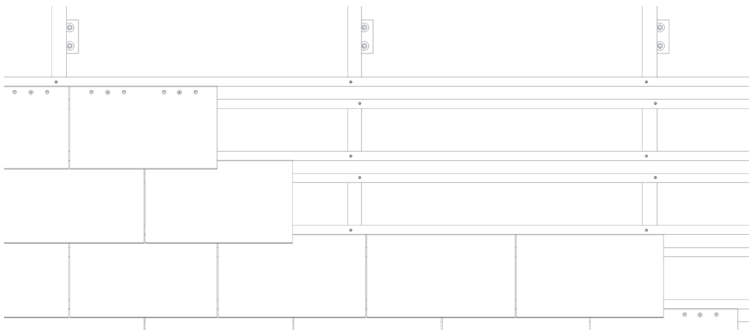

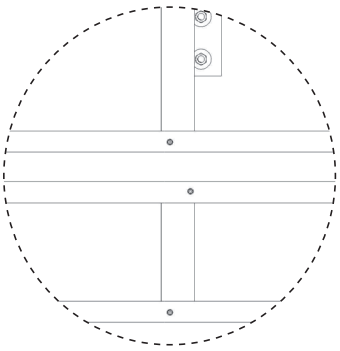

· TILING:

· Tiles can be picked up directly from the pallet, it is no need of mixing various pallets before tiling to ensure the correct pattern of the design.

· Tiles should be picked up carefully from the pallet, we should protect the tile from dirt.

· Tiling should begin from bottom line to top line.

· **All tiles must be mounted with a minimum of two screws. It is important that the tiles are fastened with the right torque**. Torque is determined from a sample mounting and it is checked continuously. Avoid impact drivers to screw the tiles.

6.5. CLEANING

The façade should be cleaned right after installation using high-pressure cold water cleaning.

The engobe on the back side of the tiles can mark the Rustikotta surface in the pallet during transportation. These white marks are only dust and should be removed during the cleaning procedure.

7. MAINTENANCE

7.1. CLEANING PROCEDURES

The main advantage is that **the maintenance** of this type of facade i**s very low**, we could say that it is almost zero.

Depending on the area where the building is placed, dirtiness caused by pollution may appear, especially which is caused by dangerous fumes.

The frequency of this cleaning will depend on the level of dirtiness. The cleaning will be carried out with high-pressure cold water without any industrial solvent.

7.2. TILE REPLACING

1. Cut the damaged tile

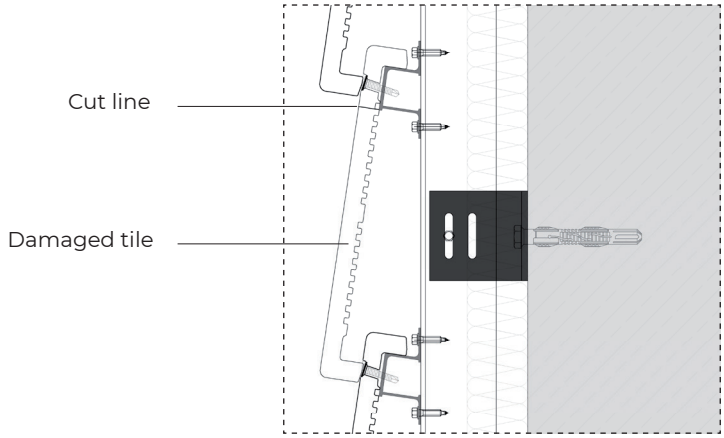

2. Reinforce the substructure

Reinforce the anchoring of the new tile using L profiles.

These profiles should be glued to the existing structure/tiles.

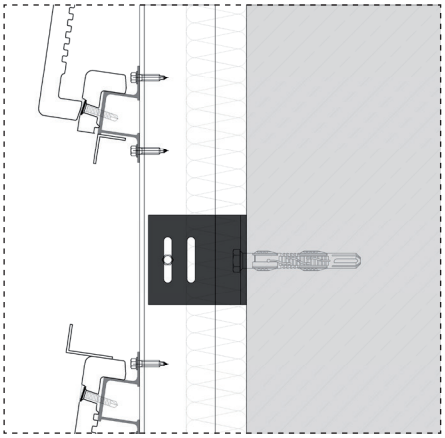

3. Glue and screw the new tile to the wall

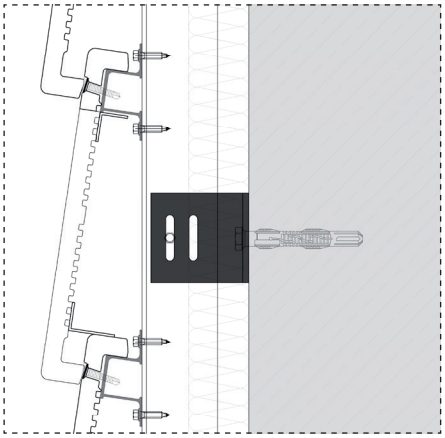

***NOTE: Façade calculations should be revised by project manager. The text is indicative and must be adapted to the project, as well as the applicable technical requirements/ legislation.*

tempio

Rustikotta skin

Technical data sheet

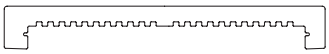

Rustikotta Prime

RKP280600 225x500x28mm
For use in coating vertical façades

Colours

EK1005 Red flamed · EK1009 Light Grey Flamed · EK1014 White September
EK1024 Antique Moss · EK1027 Black Oxid · EK1038 Tampico · EK1051 New Black

Water absortion	EN ISO 10545-3	Group AII_{a-2} (3%<E<6%)
Breaking load (225x500mm)	EN ISO 10545-4	> 1200 N
Frost resistance	EN ISO 10545-12	Fulfilled
Resistance to thermal shock	EN ISO 10545-9	Fulfilled
Impact resistance (by measurement of coefficient of restitution)	EN ISO 10545-5	0.7-0.9
Fire resistance	-	Clase A1
Stain resistance	EN ISO 10545-14	Group 5 (Glazed)
Chemical resistance	EN ISO 10545-13	Group GA (Glazed)
Linear termal expansion	EN ISO 10545-8	$5.75 * 10^{-6} K^{-1}$ (±1)

Tolerances and dimensions

Weight	-	3.9 kg/piece ±0.5 kg
Width	In extruding direction	±4.0 mm
Height	Opposite to extruding direction	±2.0 mm
Thickness	EN ISO 10545-2	28.0 mm ±1.0 mm
Straightness (in extruding direction)	EN ISO 10545-2	±1.5 mm
Ortogonality	EN ISO 10545-2	±2.0 mm
Flatness		±2.0 mm

tempio

RUSTIKOTTA SKIN

CERÁMICA MAYOR S.A.

Partida Planet s/n
03510 Callosa d'en Sarriá
Alicante, Spain

info@tempio.es
0034 965 881 175

www.tempio.es